

FAKE PROJECT

CORPORATION OF AMERICA

GRAFFITI WRITERS HANDBOOK

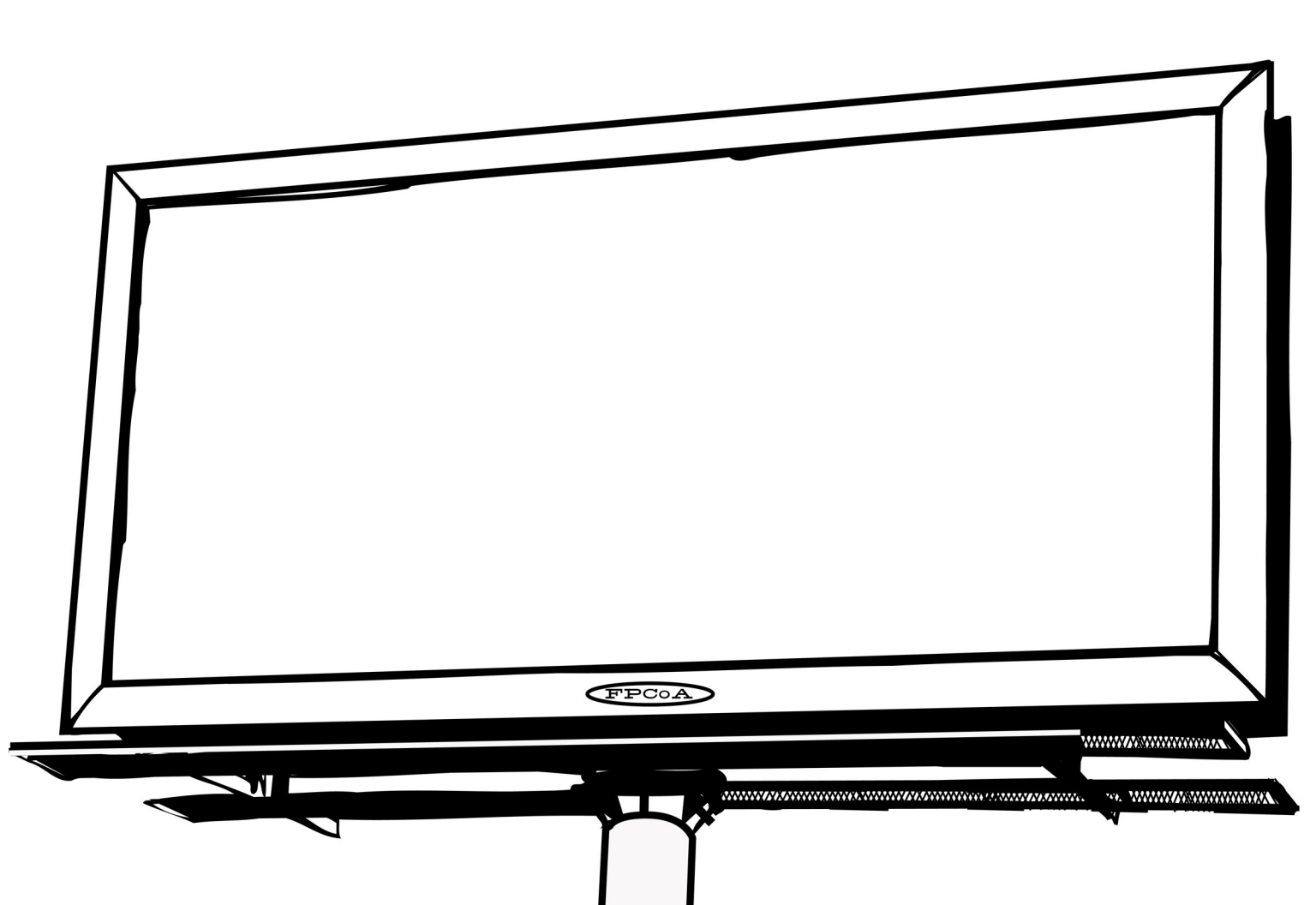
FPCoA



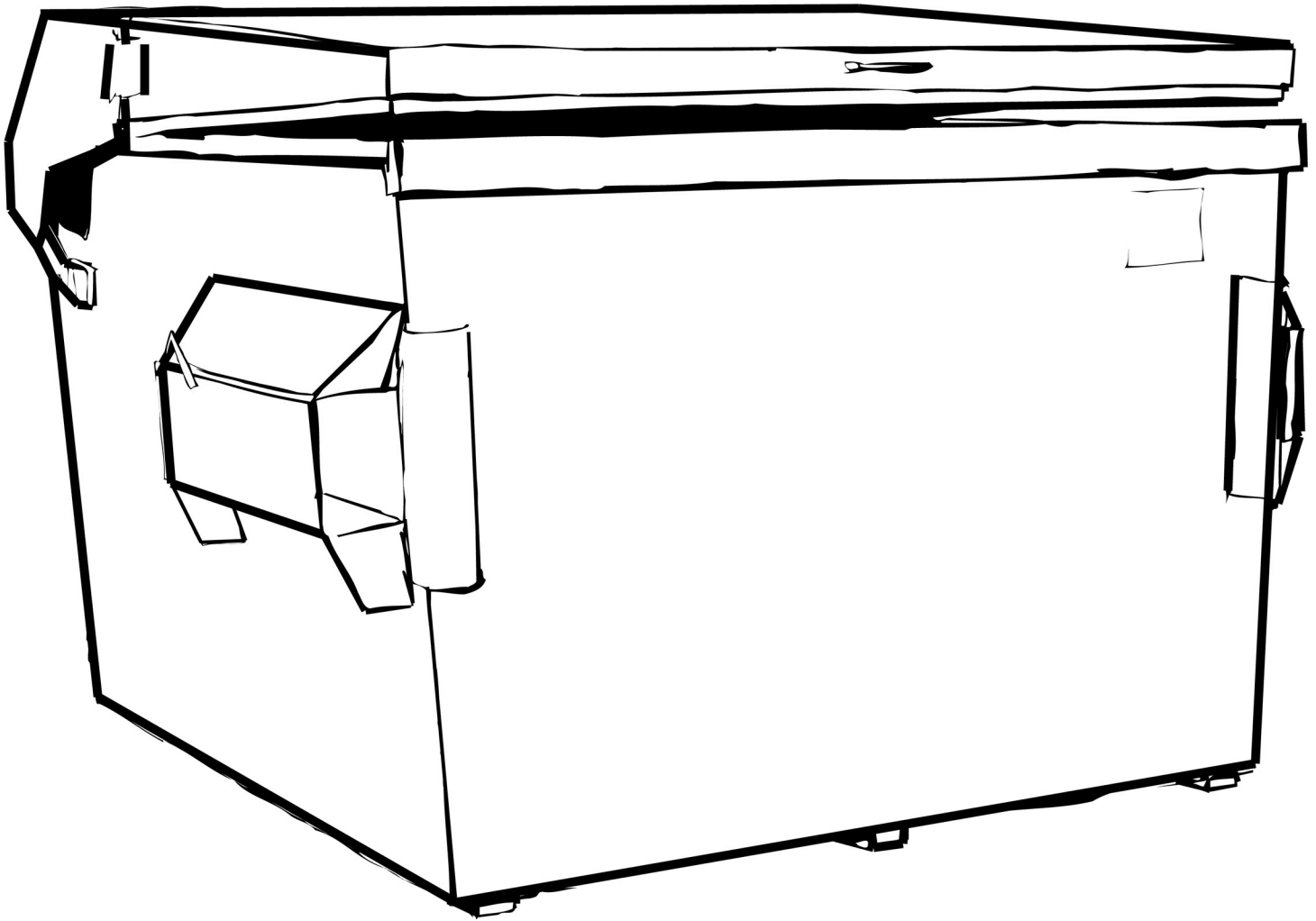

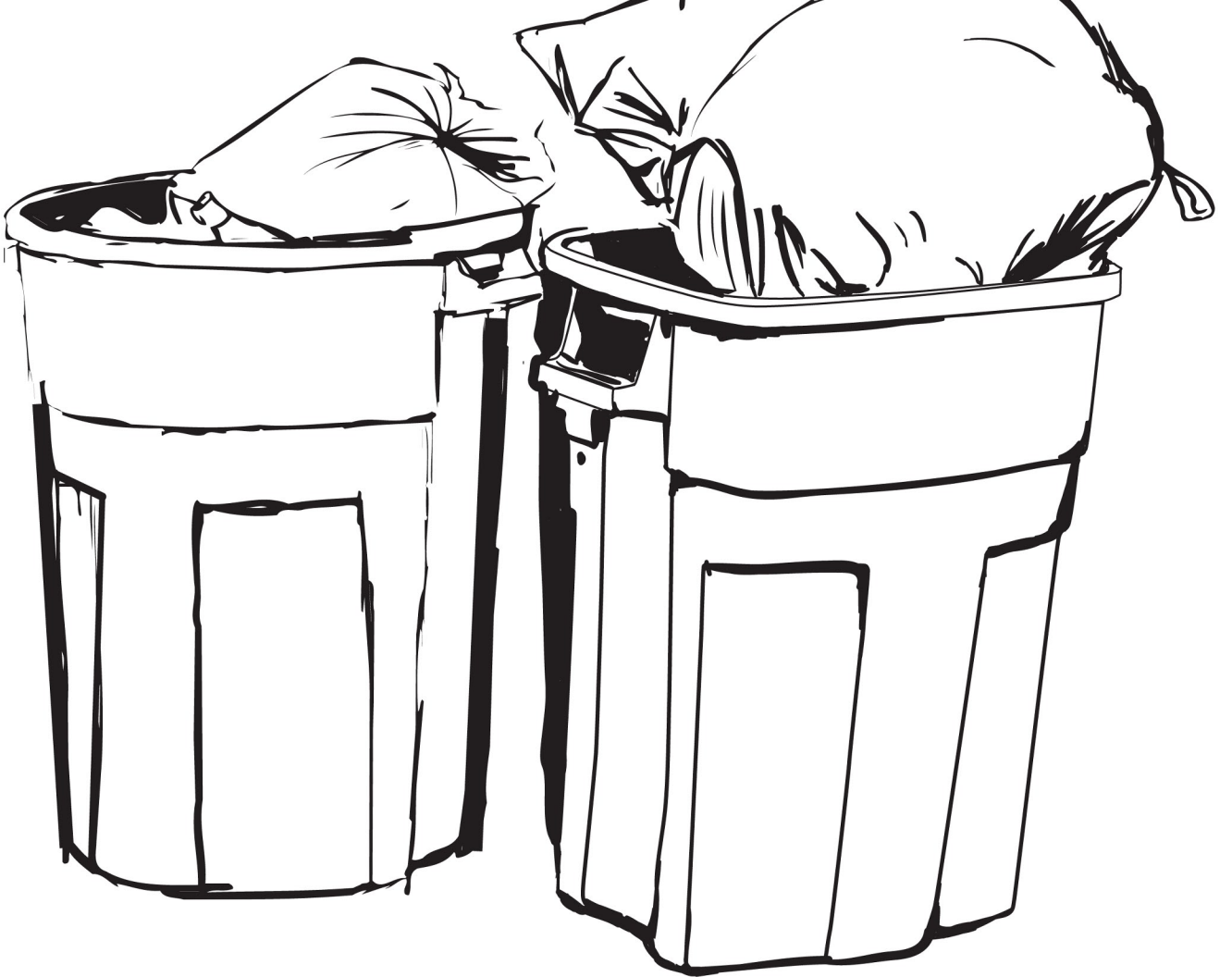

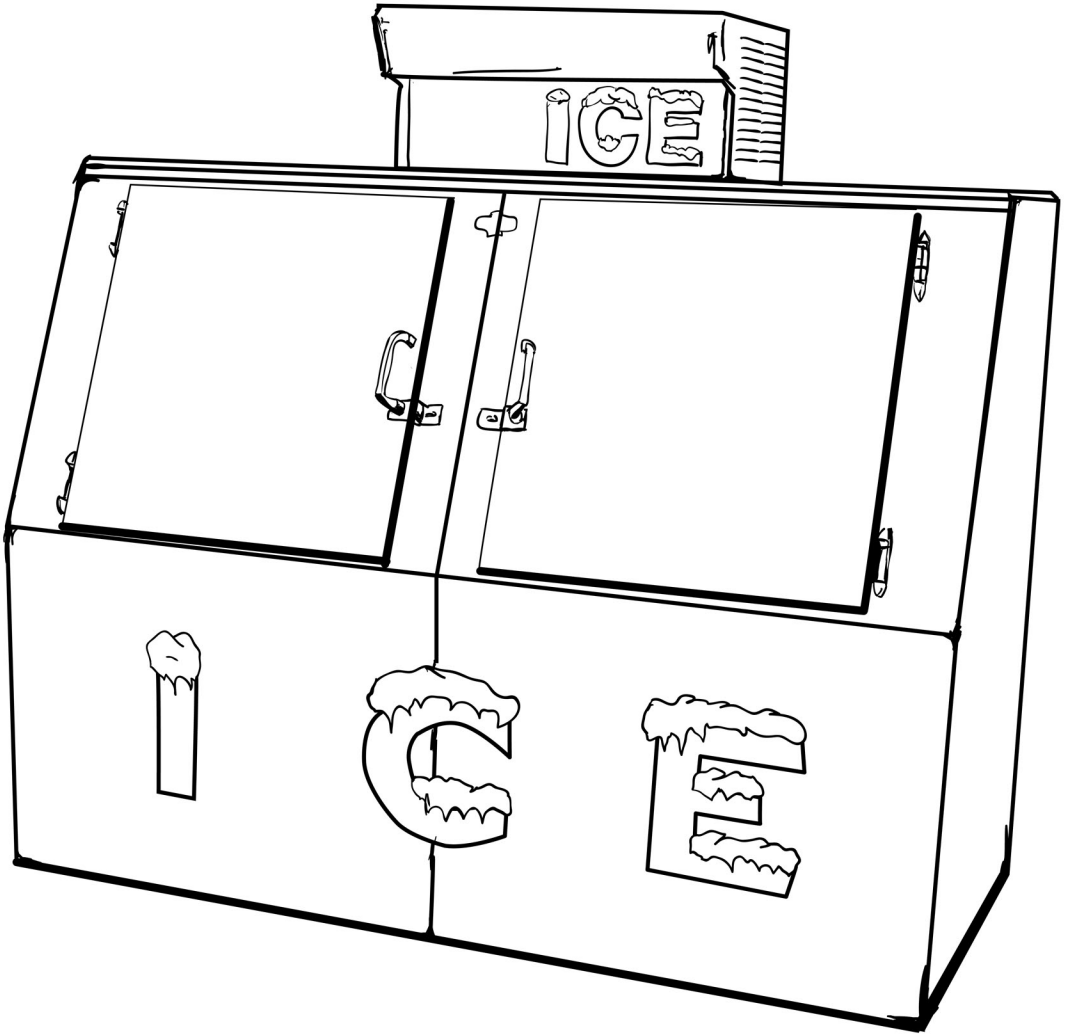
ICE
ICE

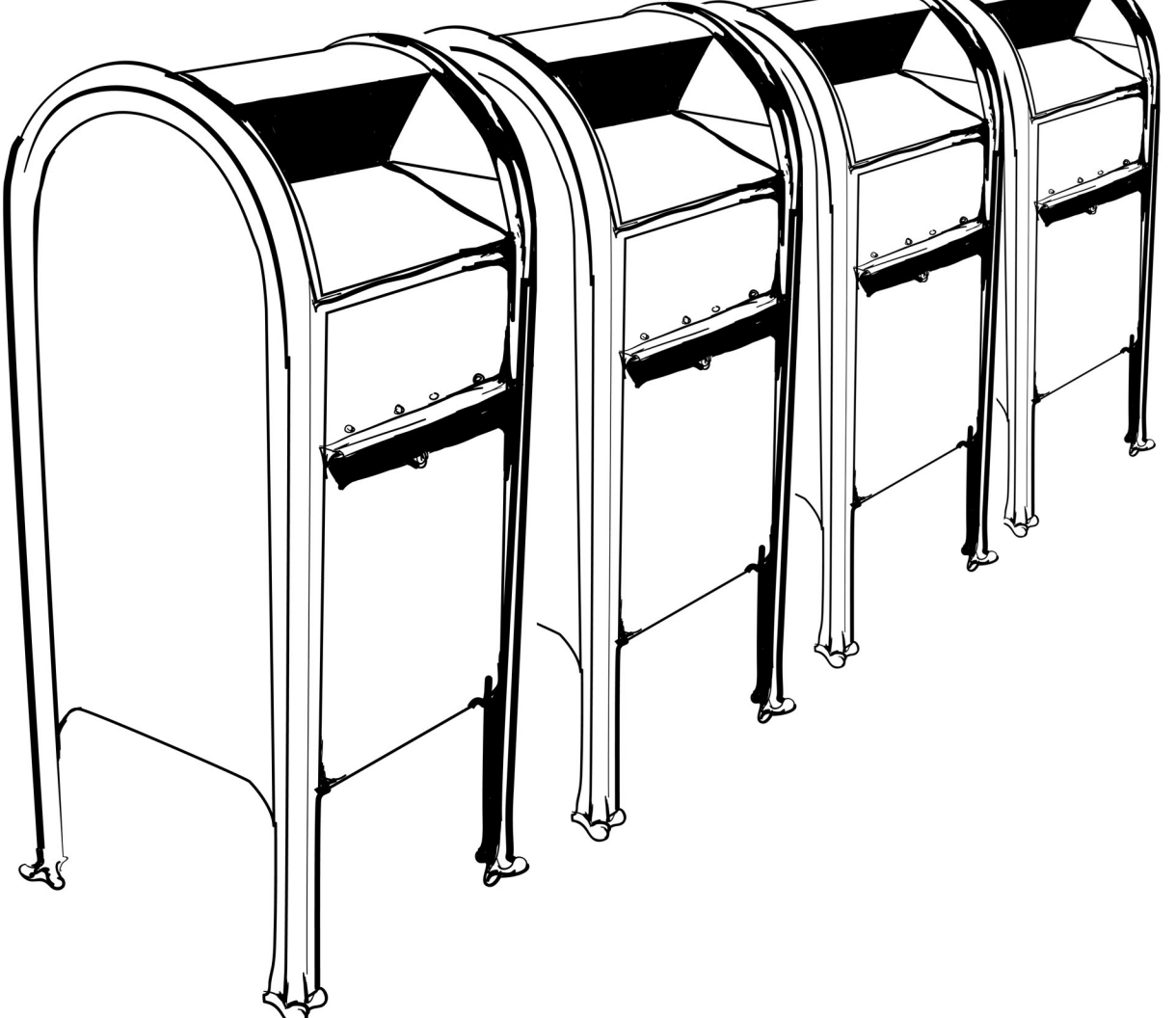

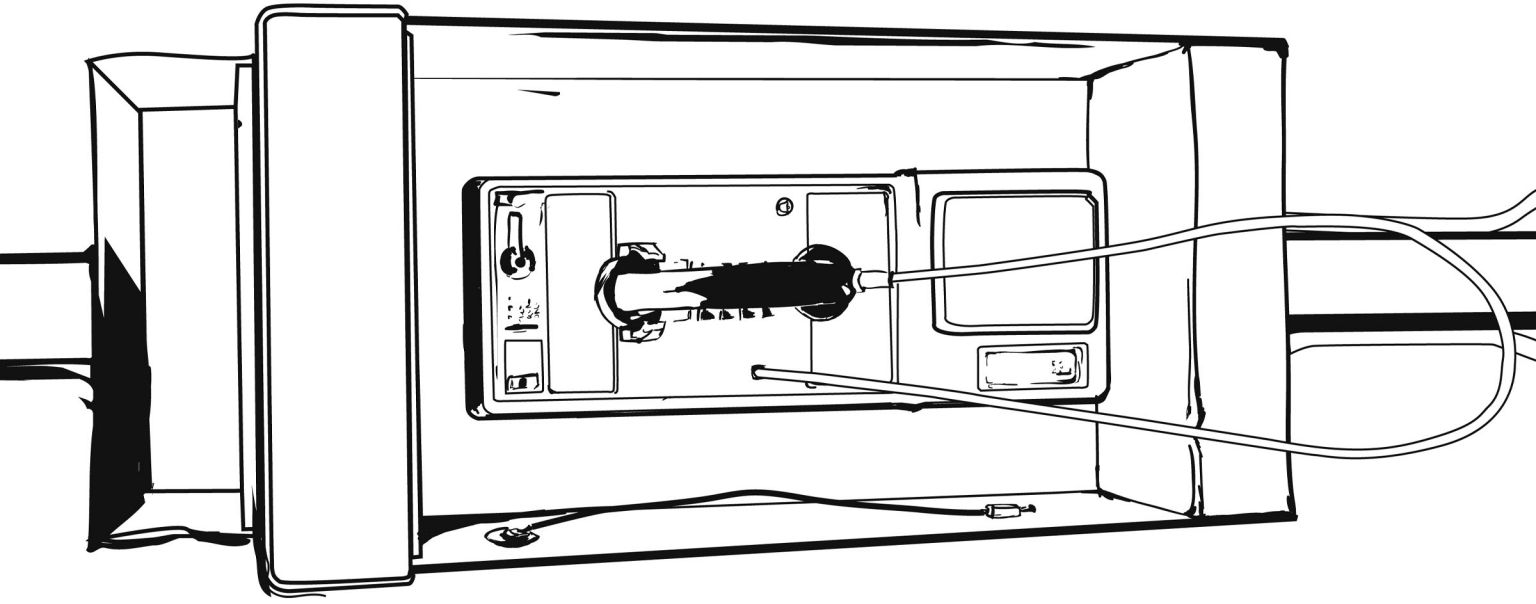

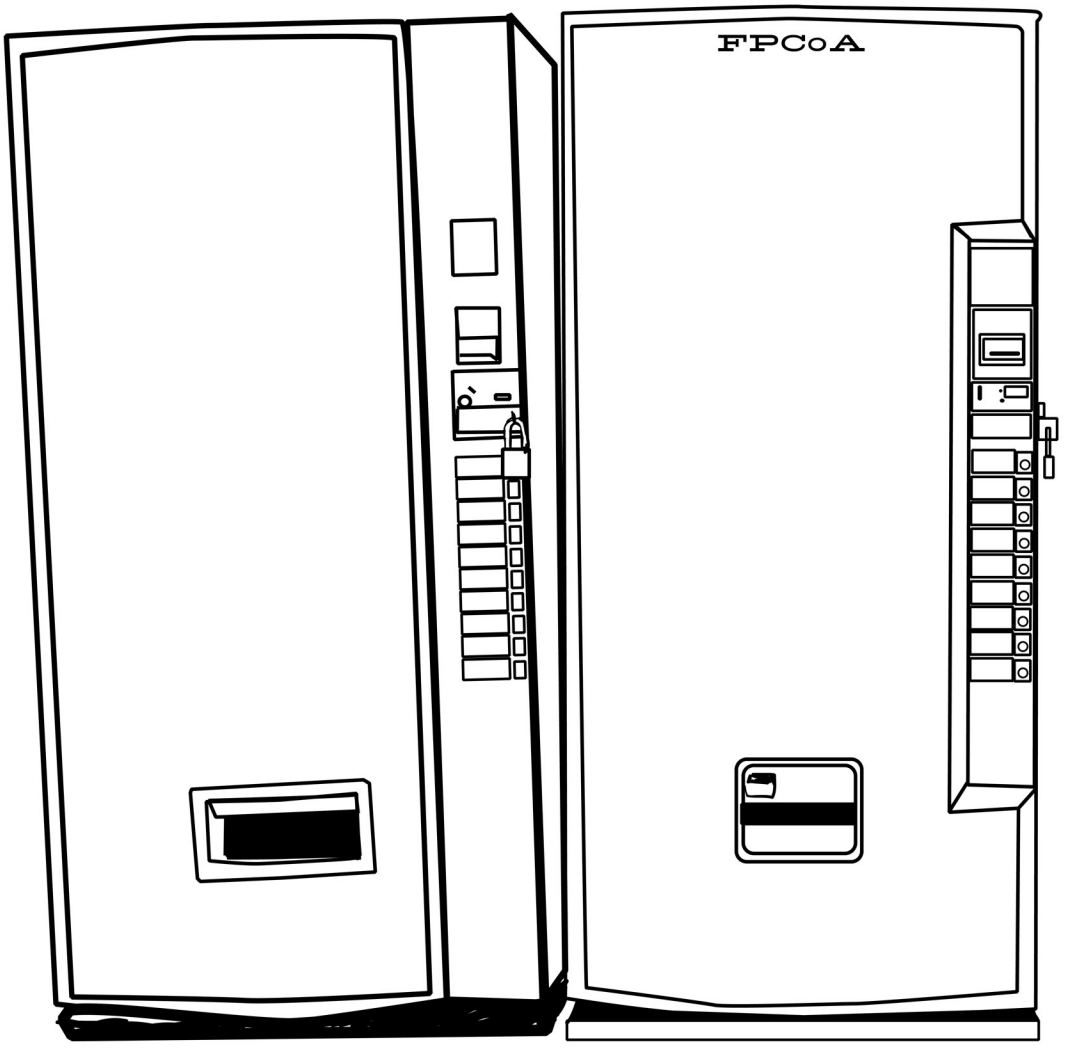
FPCoA

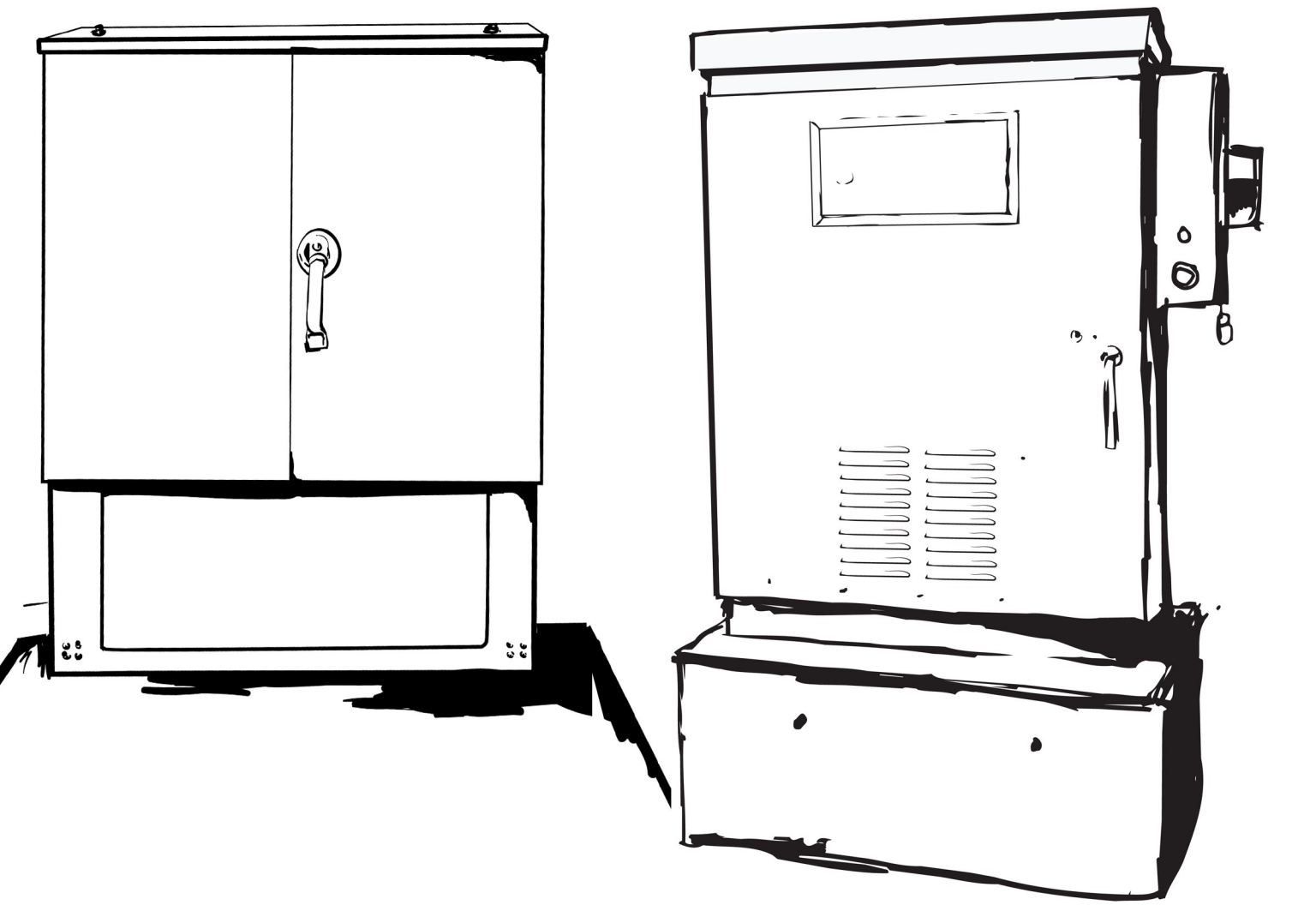

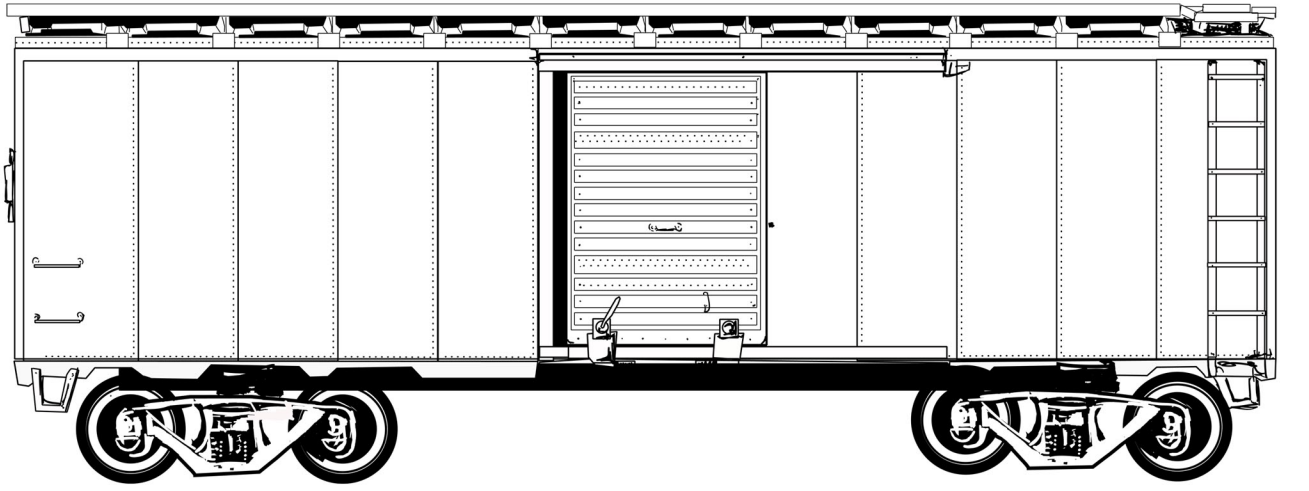

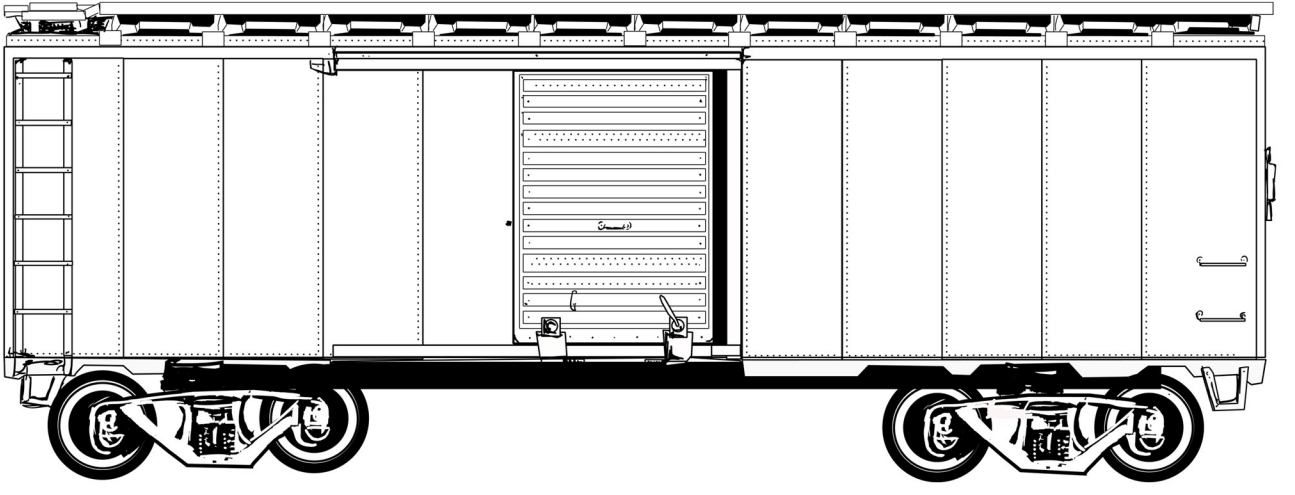

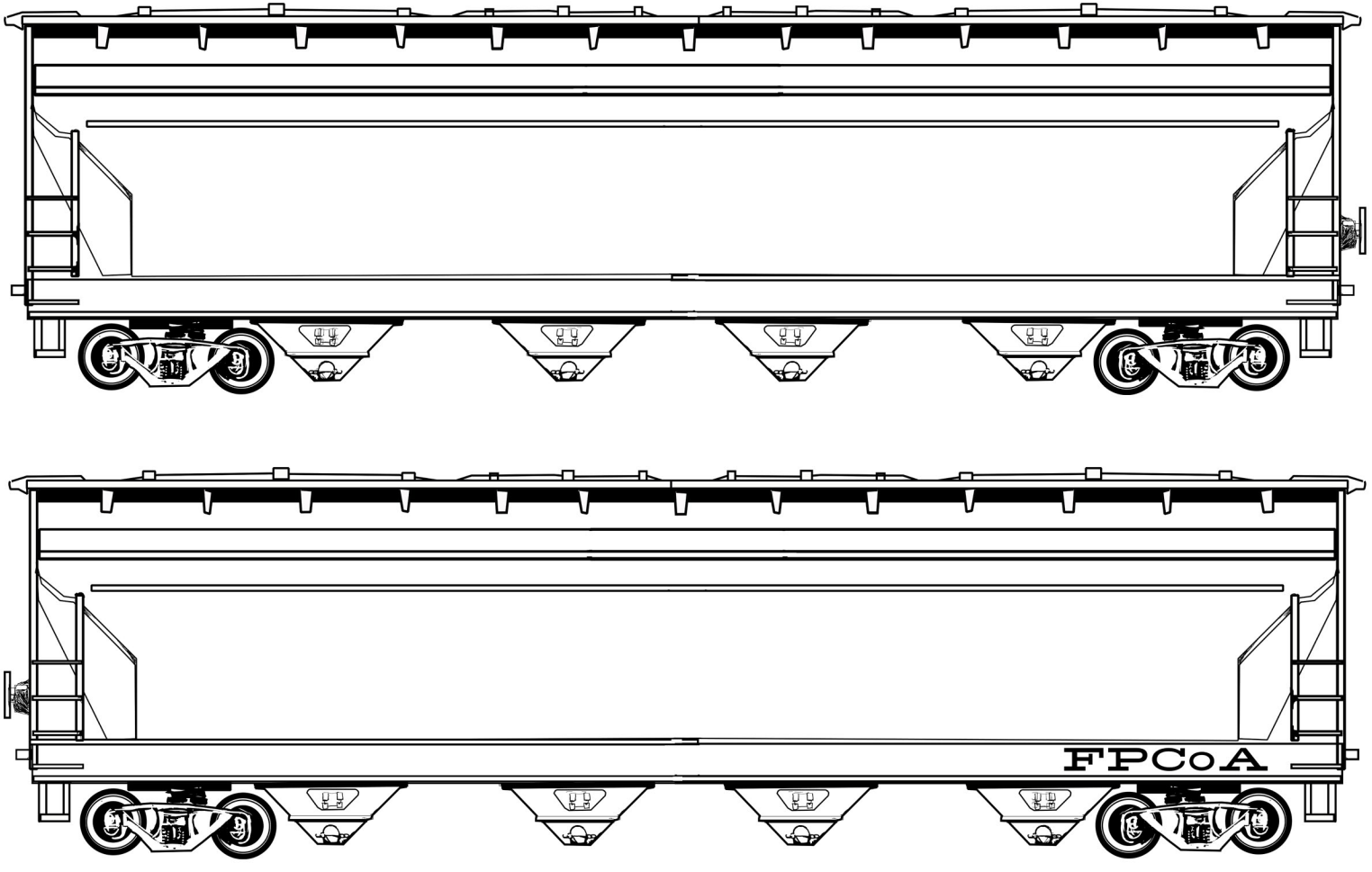
FPCoA

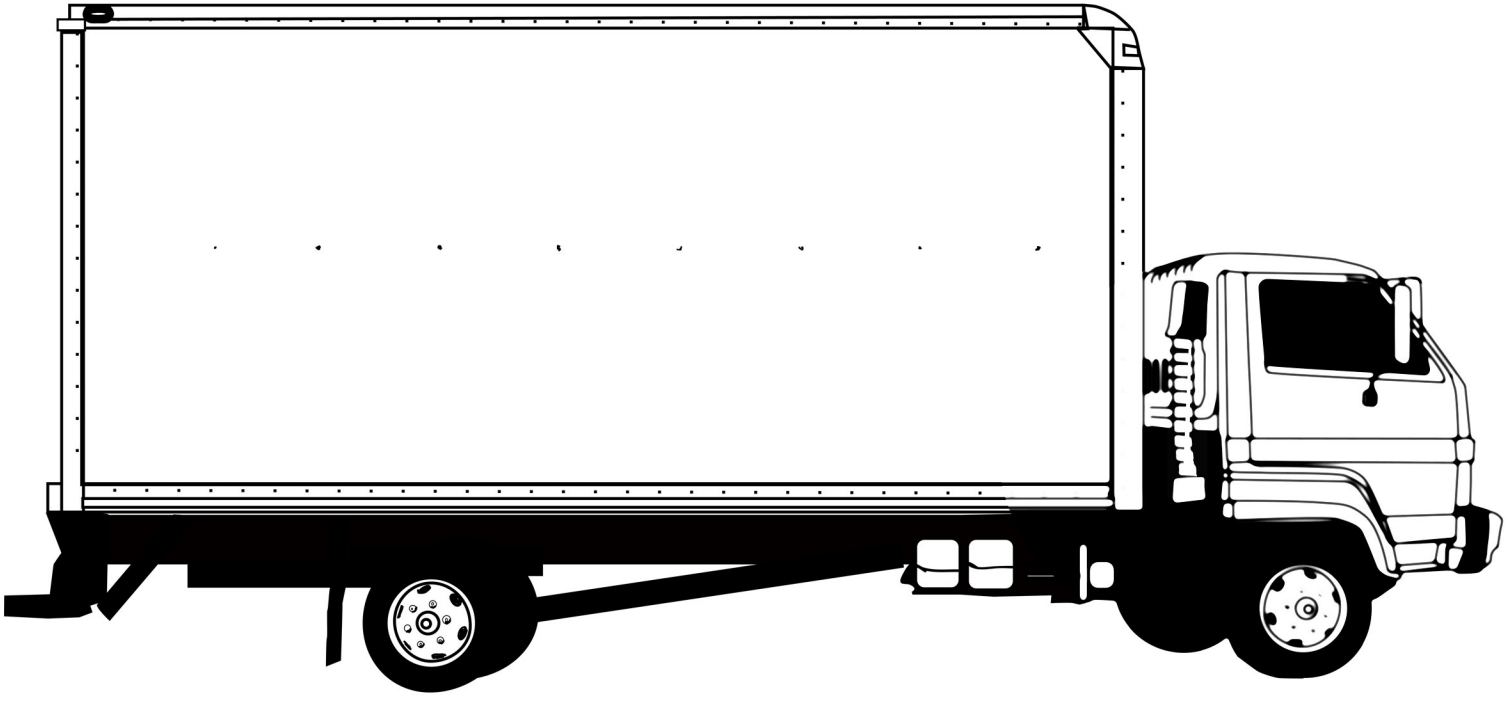

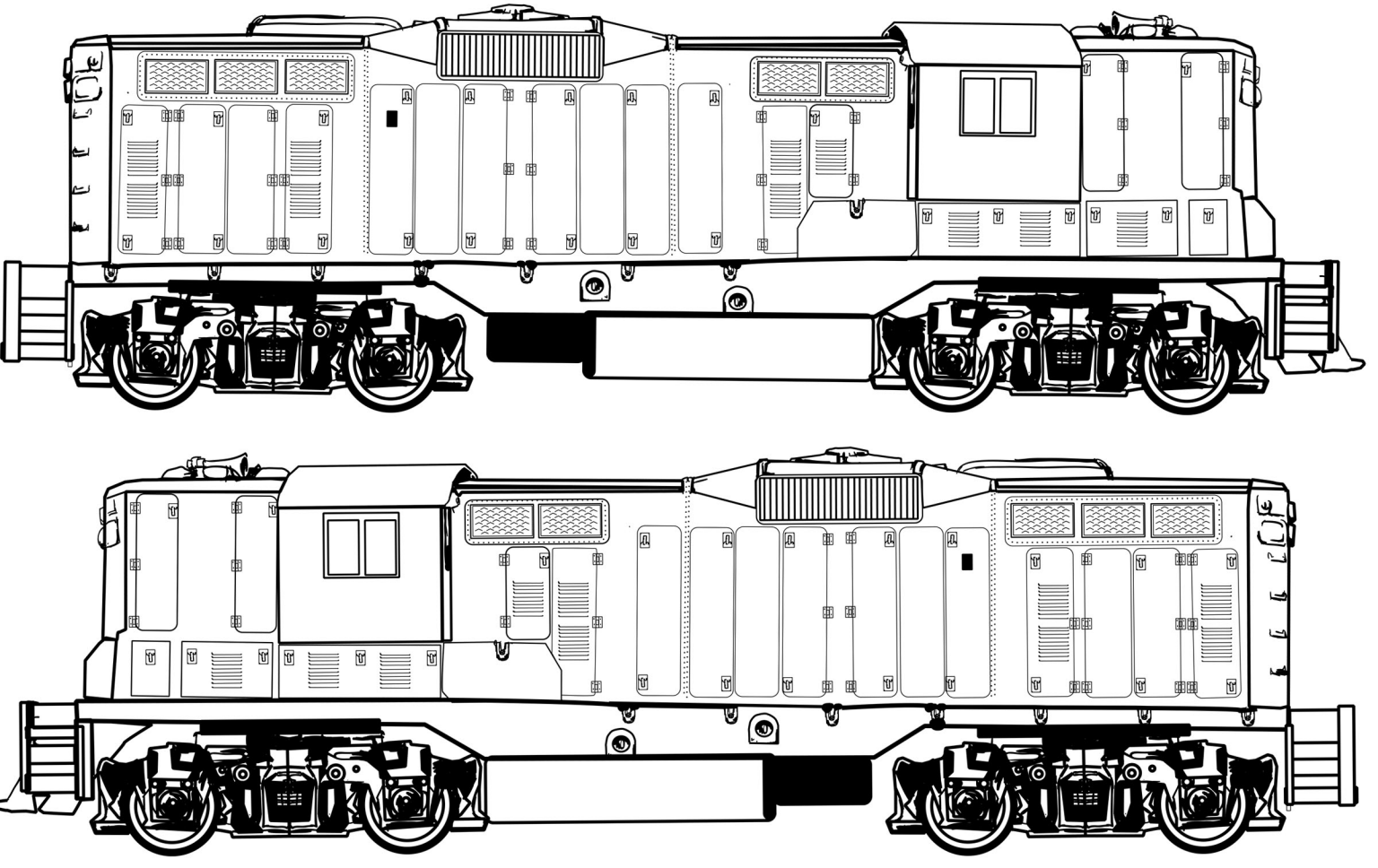

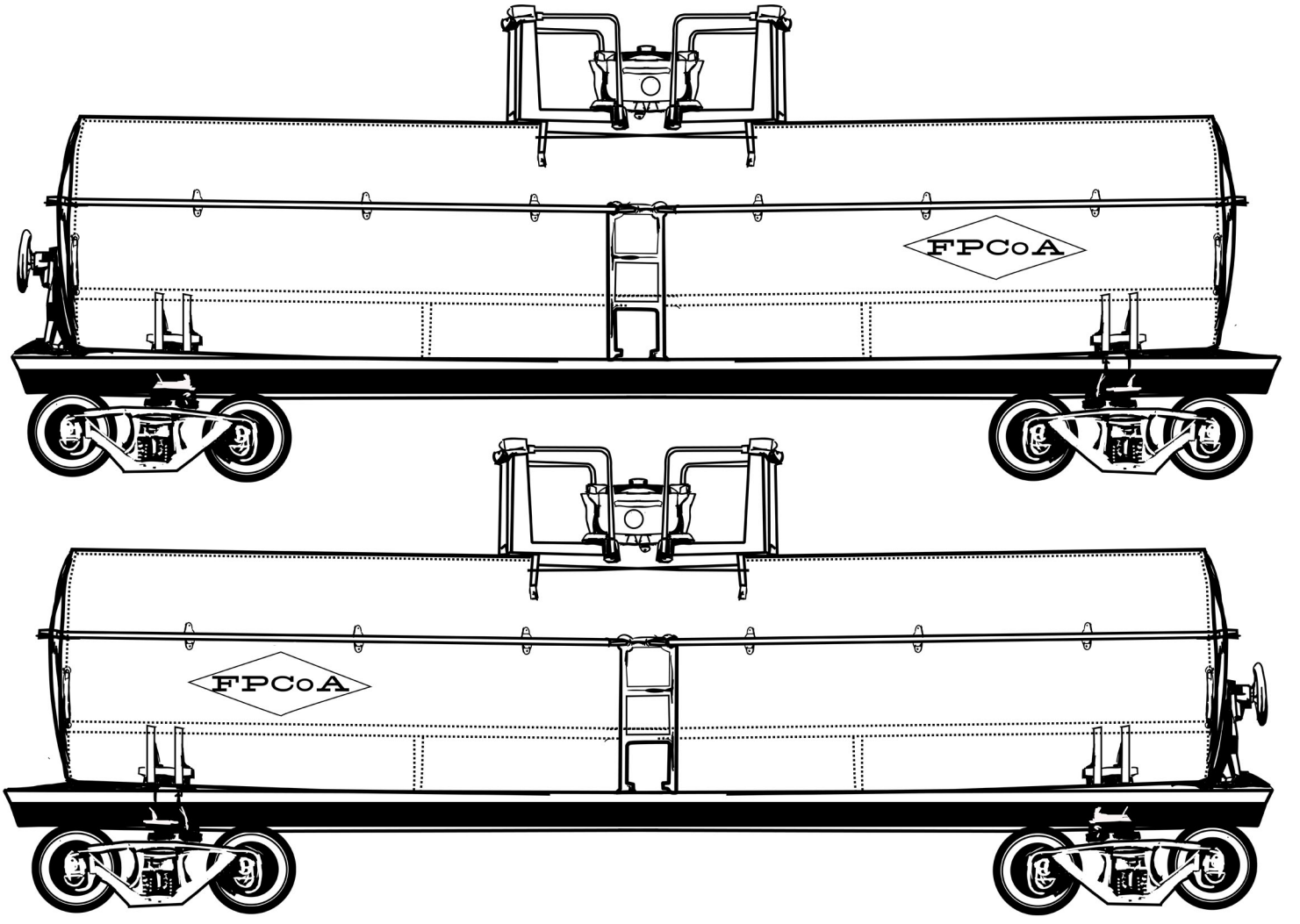
FPCoA
FPCoA

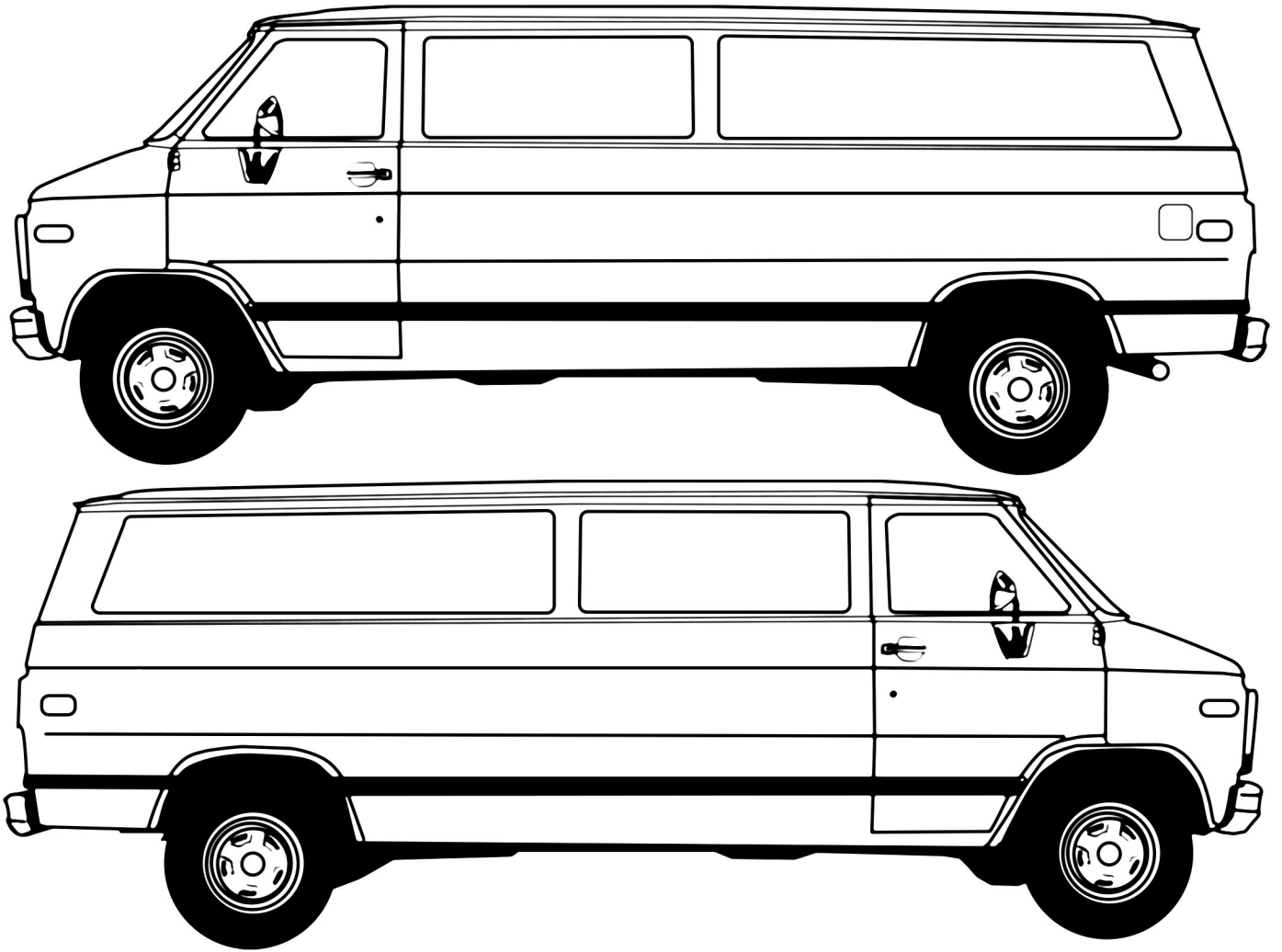

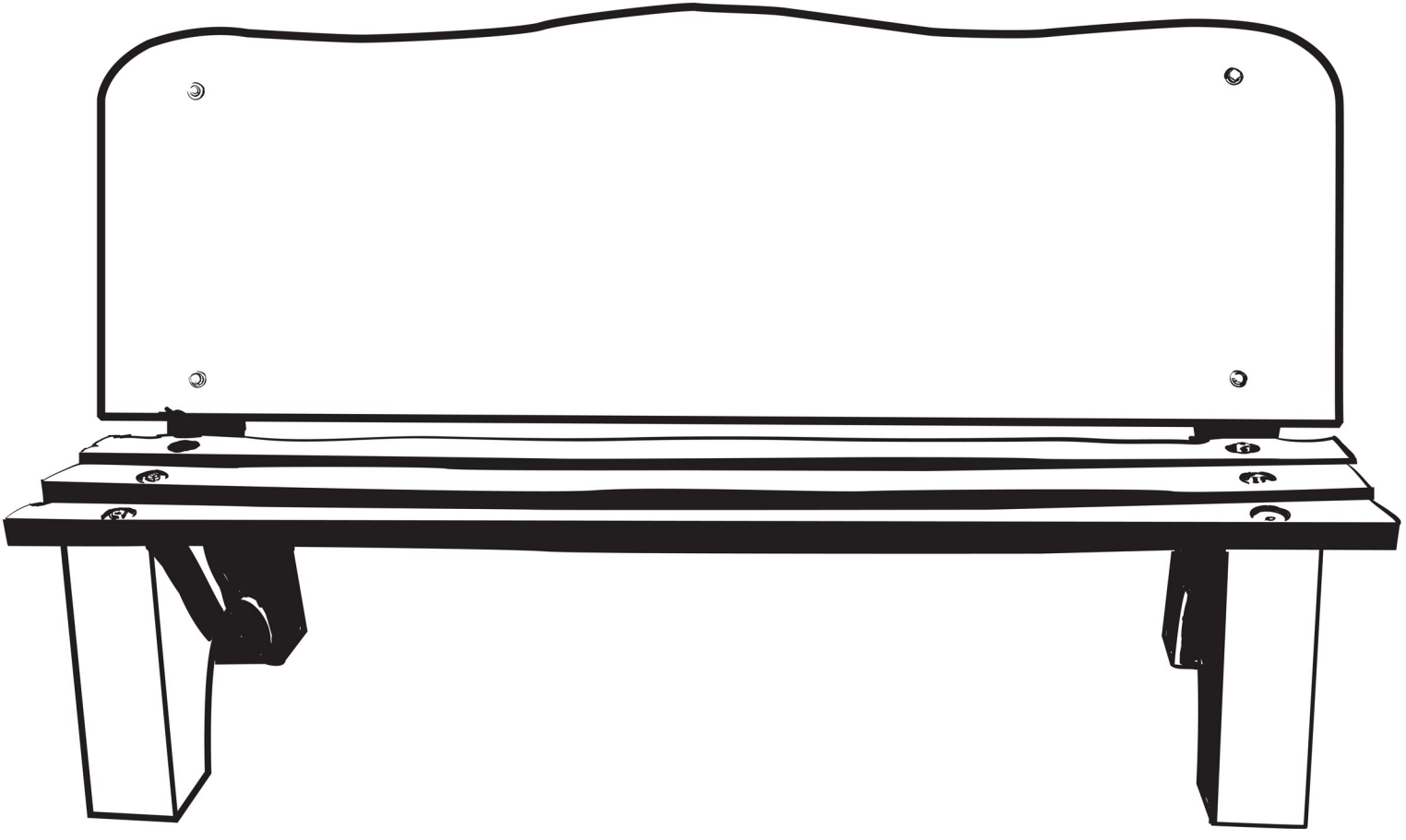

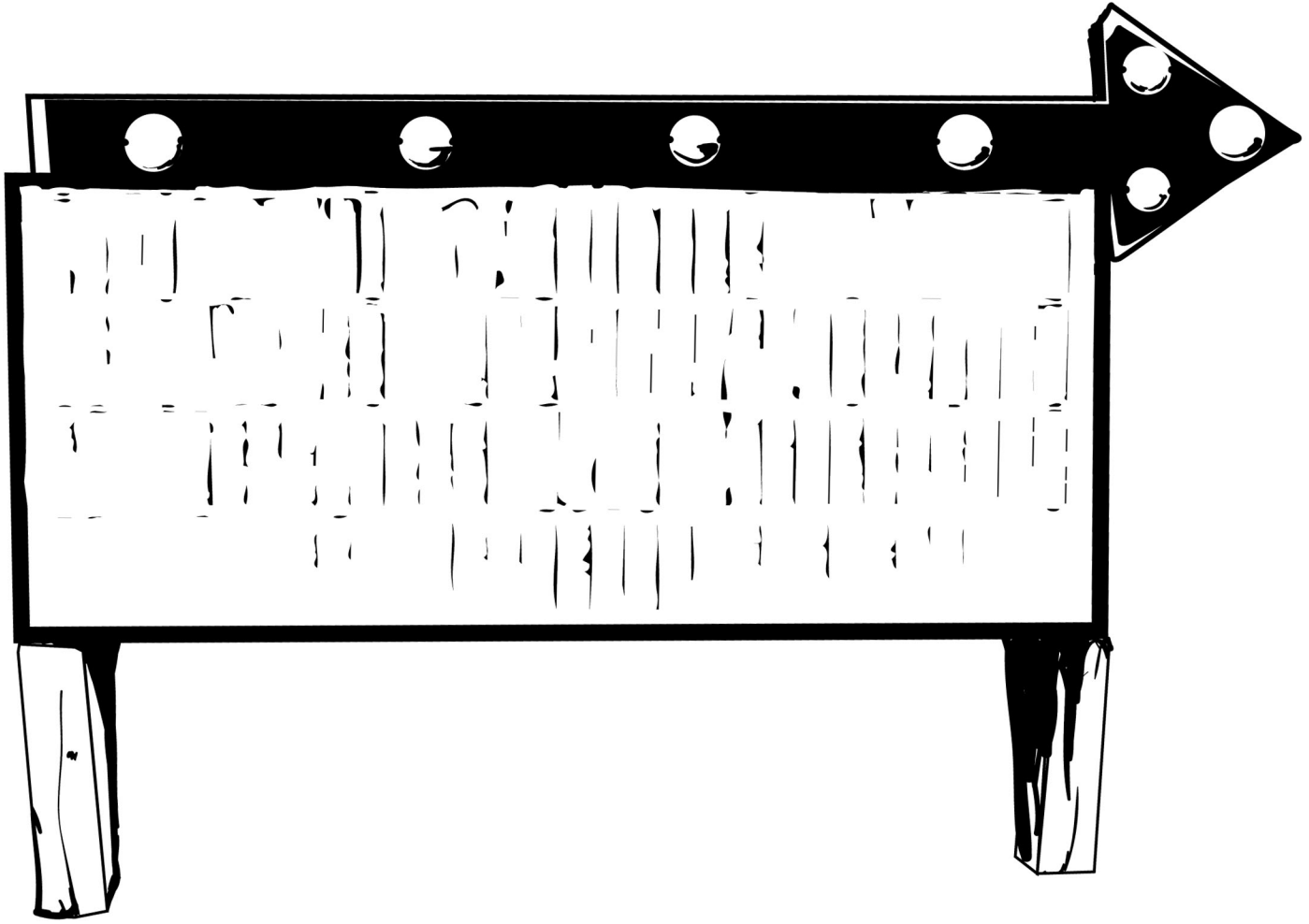

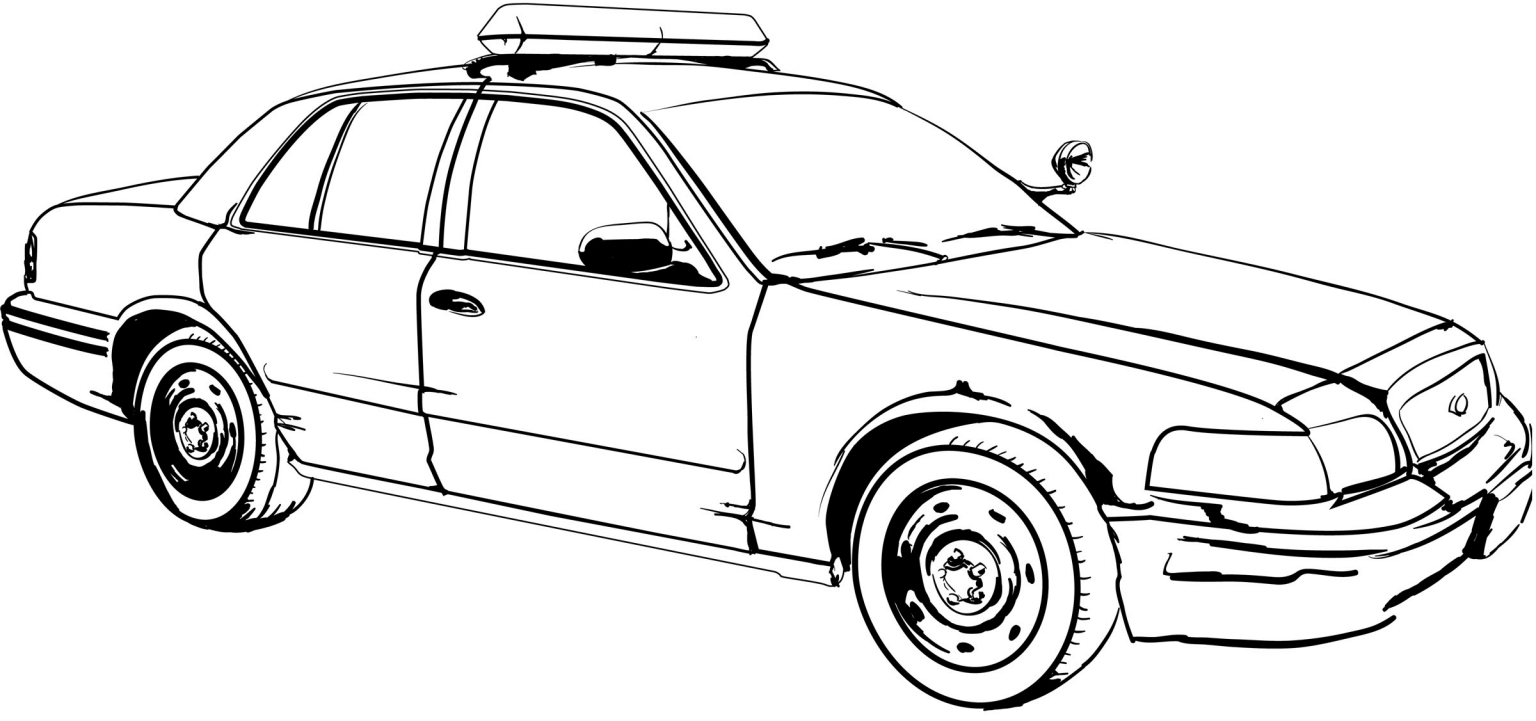



COPYRIGHT 2006 THE FAKEPROJECT CORPORATION OF AMERICA.
PLEASE SHARE THIS HANDBOOK. IT MUST SERVE FIVE READERS.